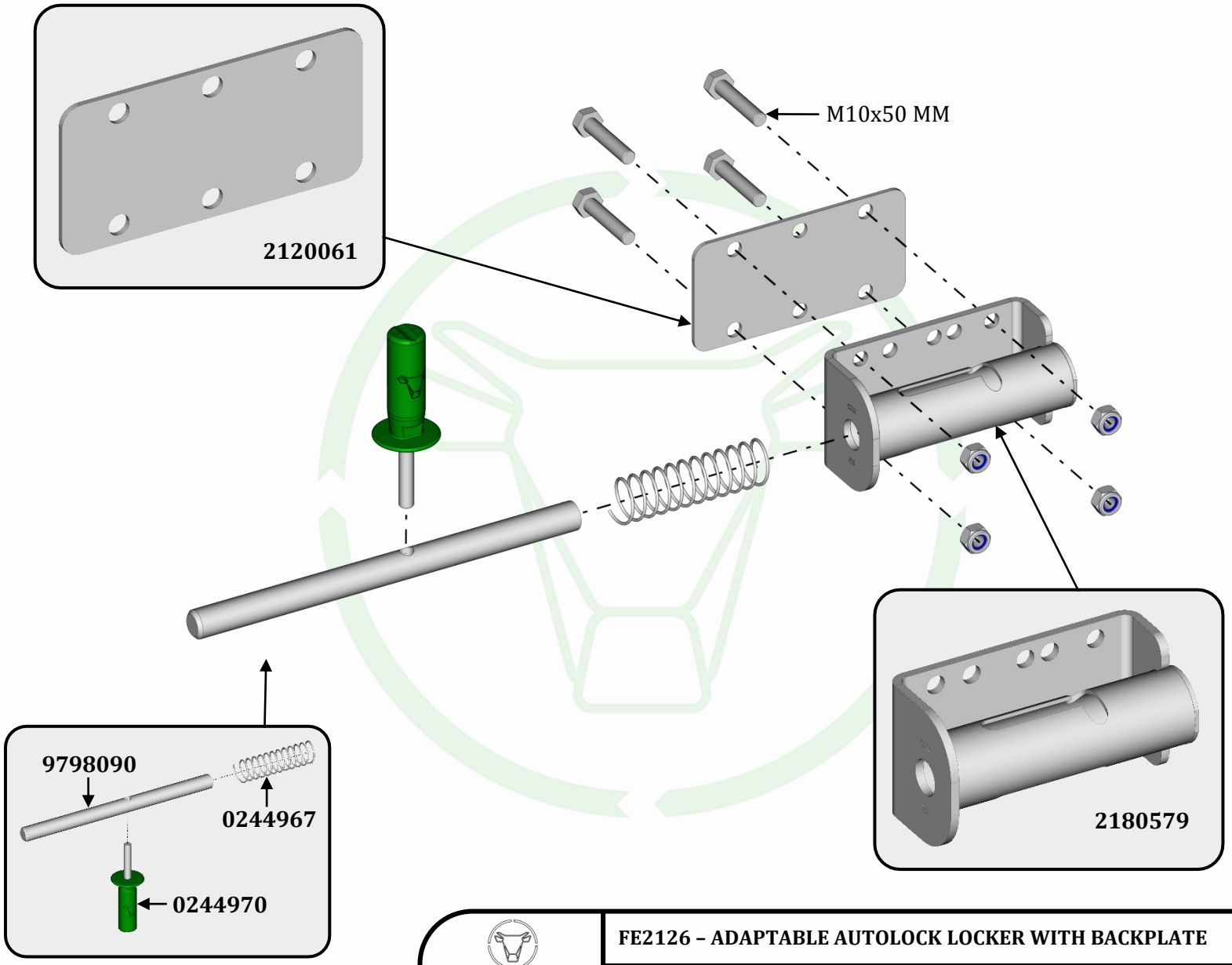

JOURDAIN www.jourdain-group.com	**FE2126 – ADAPTABLE AUTOLOCK LOCKER WITH BACKPLATE**	**FTB**
	THIS DOCUMENT IS THE EXCLUSIVE PROPERTY OF JOURDAIN SAS, IT IS PROVIDED ON A CONFIDENTIAL BASIS. IT MUST NEITHER BE COPIED, NOR DISCLOSED TO A THIRD PARTY WITHOUT OUR WRITTEN AUTORISATION	**13/01/2023**